Miniature Slide Switches

Specifications:

Contact rating:	30 V DC, 350 mA
Contact resistance:	< 20 mΩ
Insulation resistance:	> 100 MΩ at 500 V DC
Dielectric strength:	500 V, 50 Hz for the duration of 1 minute
Operating temperature:	– 20 °C to + 85 °C / MFP 223 P: – 10 °C to + 60 °C
Mechanical life:	minimum 10 000 operations
Contacts:	copper alloy, silver-plated over nickel barrier
Slide colour:	black, further colours on request
Soldering conditions:	wave-soldering – max.: 5 sec, 260 °C ± 5 °C

6

Models:	Switching functions			
MFP 221 N non-shorting	on on		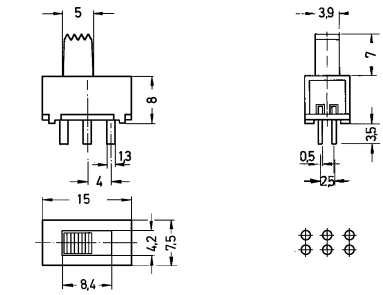	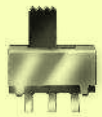
MFP 223 P shorting	on on on		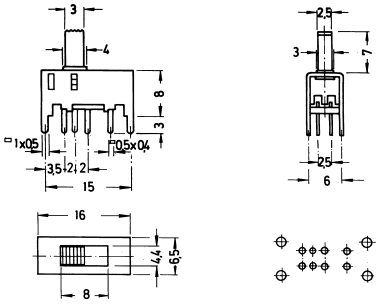	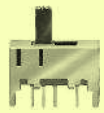
MFP 231 P shorting	on on on		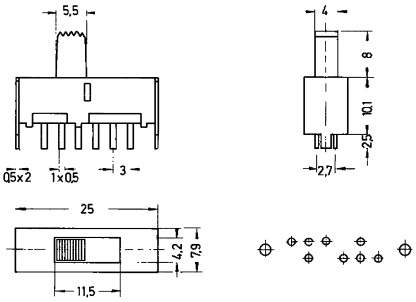	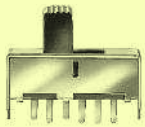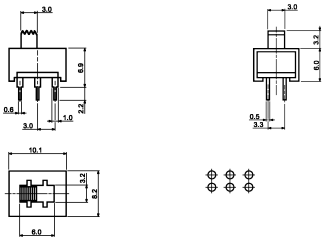
MFP 291 N non-shorting	on on